Heavy Duty Rock Grapple

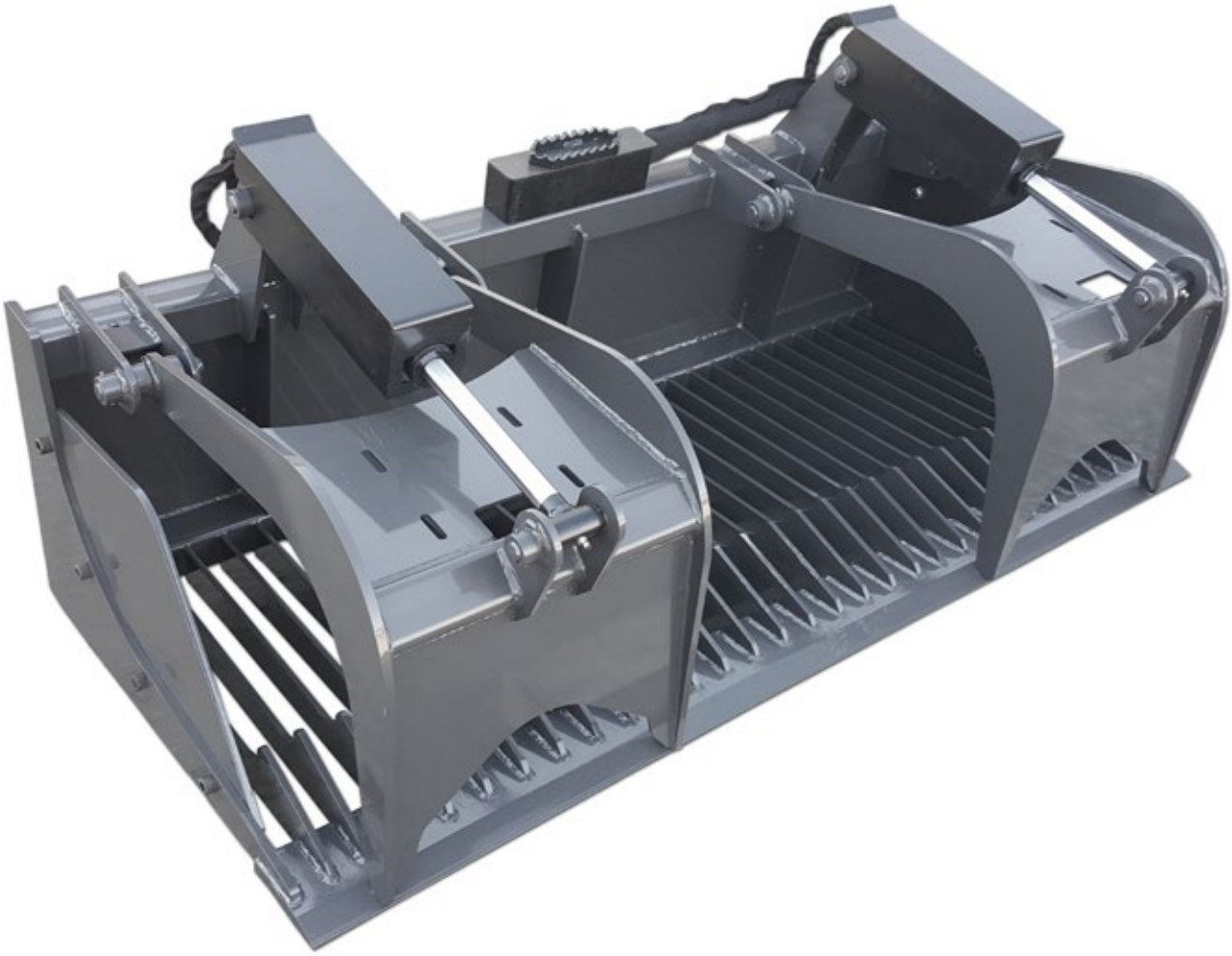

Our Heavy Duty Rock Grapple is great for sifting through dirt in order to remove rocks. With the tines set at 2–3/8" apart, you pick up most everything but the dirt. You can also pick up large rocks, logs, brush or just about anything else by use of the grapples. We use twin 2" bore by 10" stroke cylinders rated at 4,000 psi on all of our grapples. The rock grapple comes standard with 3/4 x 6 cutting edge and is upgraded to 1 x 8 edge when optional teeth are added. Up to 65 HP

- **Great for sifting dirt to remove rocks**
- **2" bore by 10" stroke cylinders**
- **Available sizes: 63", 66", 72", 81"**
- **Bolt on sides included**
- **3/4 x 6 Cutting edge**
- **Optional weld on teeth with 1 x 8 cutting edge**

Heavy Duty Rock Grapple Specs

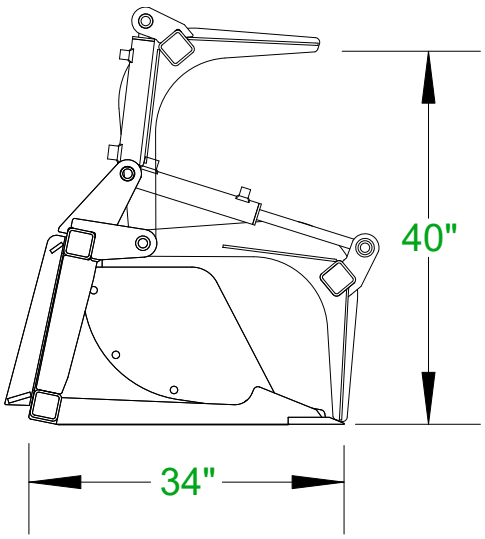

CID CONSTRUCTION IMPLEMENTS DEPOT INC.
X-treme Attachments

X-treme Rock Grapple

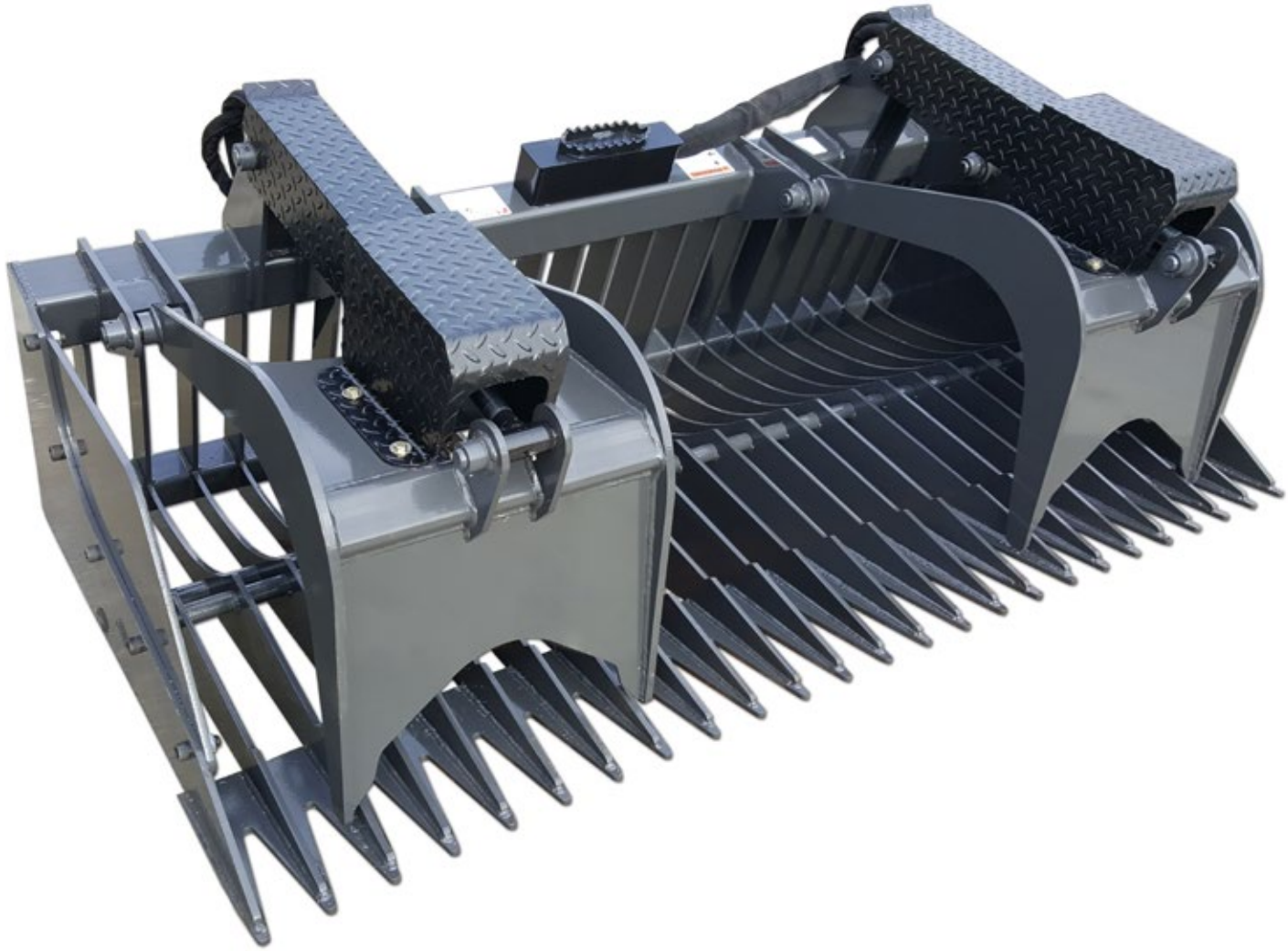

Our X-Treme Rock Grapple is great for sifting through dirt in order to remove rocks. With the tines set at 3” apart, you pick up most everything but the dirt. You can also pick up large rocks, logs, brush or just about anything else by use of the grapples. We use twin 2” bore by 10” stroke cylinders rated at 4,000 psi on all of our grapples. 65 HP and up.

- **Tines set at 3” apart**
- **Cylinders rated at 4,000 psi**
- **Twin 2” bore by 10” stroke cylinders**
- **Bolt on sides included**
- **Available sizes: 66", 72", 78", 81" , 84"**

X-treme Rock Grapple Specs

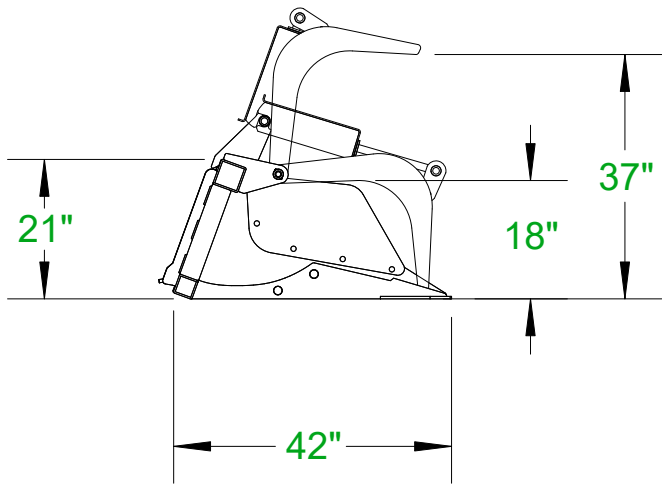

Root Grapples

Our root grapples are a necessity in the tree industry, and for contractors clearing lots for home site building. They are ideal for moving logs, brush, rocks or just about any type of debris, which makes them essential tools for storm damage clean up.

All of our units are built from top quality steel and will exceed the lifting capacity of the skid steer machines they are used on. Our grapples feature independently operated 2" bore by 10" stroke cylinder(s) to adjust for uneven loads. They also feature grease fittings at every pivot point.

One feature that separates our Standard and Heavy Duty Root Grapples from our competitor's attachments is that we offer optional bolt on cylinder rod covers to protect the hydraulic cylinder shafts. Most root grapples only have the actual cylinder enclosed and not the shaft. We give you the option to protect both. Anyone that has had debris fall on the cylinder shaft knows what damage this can cause.

Compact Tractor Root Grapple

Our Compact Tractor Root Grapple is perfect for the compact tractor. These grapples are built strong yet very light weight.

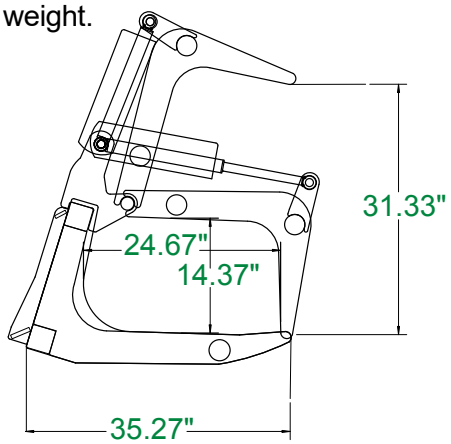

- **Designed for compact tractors**
- **2" bore by 10" stroke cylinder**
- **Available sizes: 60", 66", 72"**

Standard Duty Root Grapple

Our Standard Duty Grapple is built from 3/8" thick steel plate on the top and bottom, and incorporates 3" square tubing.

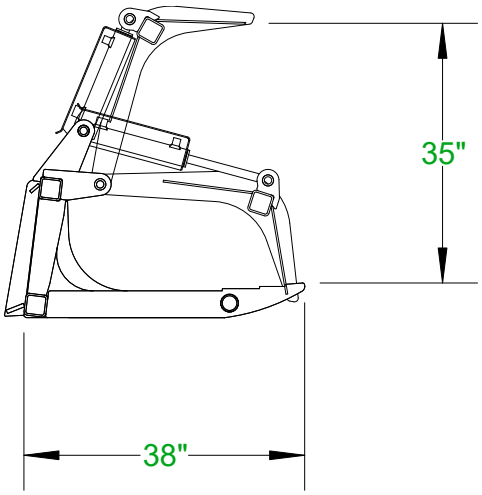

- **Recommended machine size: 35-45 HP and under**
- **2" bore by 10" stroke cylinders**
- **Hydraulic lines routed inside the tubing to prevent tears**
- **Optional spacer tines**
- **Available sizes: 63", 66", 72"**

Root Grapples

Heavy Duty Root Grapple

Our heavy Duty Grapple is built from 1/2" thick steel plate on the top and bottom, and incorporates 3" square tubing.

- Recommended machine size: 45 - 65 HP
- 2" bore by 10" stroke cylinders
- Hydraulic lines routed inside the tubing to prevent tears
- Optional spacer tines
- Available sizes: 63", 66", 72", 78", 81"

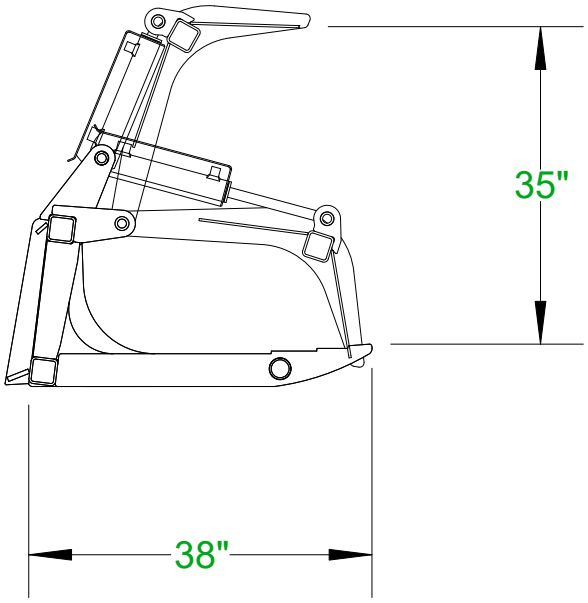

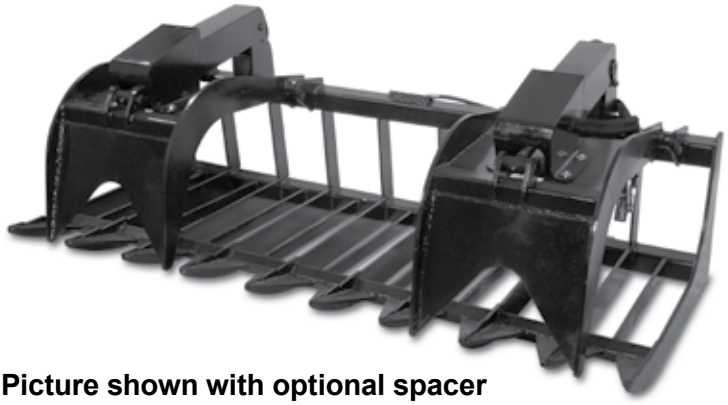

Picture shown with optional spacer tines and optional bolt on cylinder rod cover kit.

X-treme Root Grapple

The X-treme Root Grapple is the grapple of choice for those who need an attachment that will hold up in severe applications. It can handle more material and is more rugged that our other grapples. It's built from 5/8" thick steel plate on the top, 1/2" on bottom, and incorporates 4" square tubing. It also features enclosed hydraulic cylinders and shafts.

- Recommended machine size: 65 HP and above
- 2" bore by 10" stroke cylinders
- Hydraulic lines routed inside the tubing to prevent tears
- Optional spacer tines
- Available sizes: 63", 66", 72", 78", 81", 84"

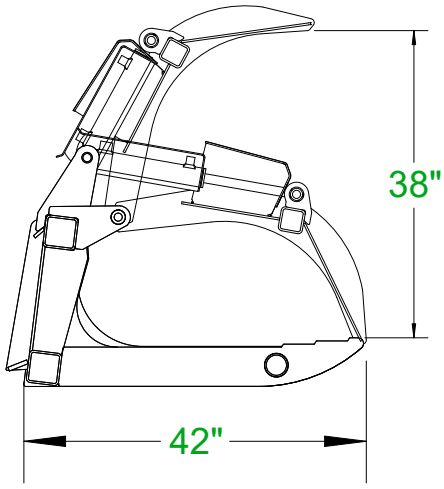

Grapple Rakes

Our Grapple Rakes are ideal for raking up debris. The grapples can then be used to load the debris into a dump truck. The shape of the grapple rake makes it easy to roll debris into tight piles if you are planning to burn. A single grapple or two independent grapples are available. We use twin 2" bore by 10" stroke cylinders, rated at 4,000 psi to handle the toughest jobs. Our Compact Tractor Grapple Rake is for use on tractors less than 40 HP. Built heavy enough for rigorous use but light enough for compact tractors. Our Standard Duty Grapple Rakes are built with 3/8" top quality steel and is rated for 35-50 HP machines. Our Heavy Duty Rakes are built with 1/2" top quality steel and is rated for 45-65 HP machines. Our Grapple Rake fully opens to 51 inches.

- **Two independent grapples**
- **Unique design makes it easy to roll debris into tight piles**
- **Standard Duty sizes: 63", 66" , 72"**
- **Heavy Duty sizes: 63", 72" , 81" , 84" , 96"**
- **Compact Tractor Sizes: 48", 54", 60"**

Compact Tractor Grapple Rake Specs

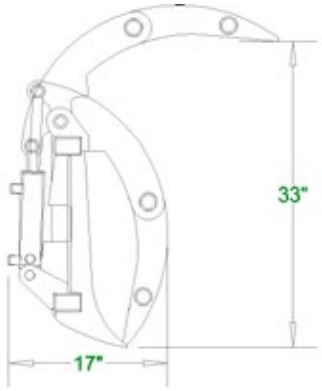

Standard / Heavy Duty Grapple Rake Specs

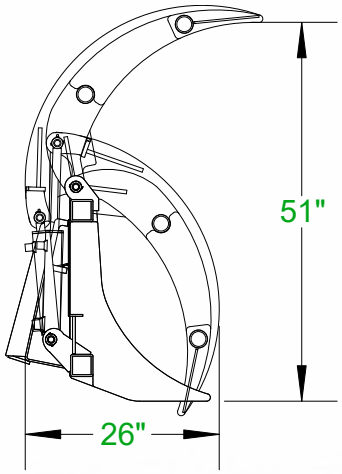

X-treme Grapple Rake

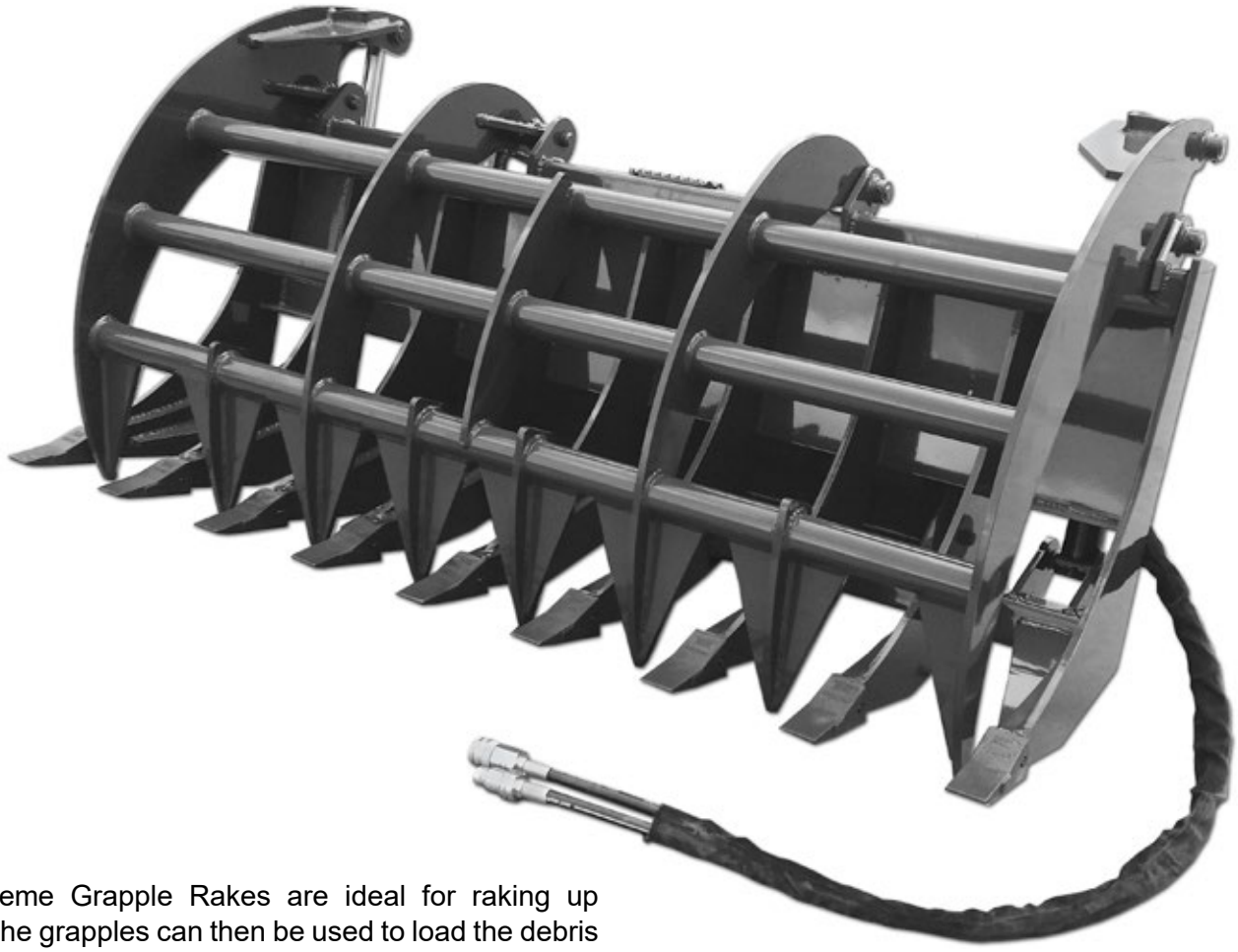

Our X-treme Grapple Rakes are ideal for raking up debris. The grapples can then be used to load the debris into a dump truck. The shape of the grapple rake makes it easy to roll debris into tight piles if you are planning to burn. A single grapple or two independent grapples are available. We use twin 2" bore by 10" stroke cylinders, rated at 4,000 psi to handle the toughest jobs. Our X-treme Grapple Rakes are built with 1/2" top quality steel and come standard with 23 series teeth. Our Grapple Rake fully opens to 51 inches and is rated for machines 65 HP and up.

- **Available as a single grapple or two independent grapples**
- **Twin 2" bore by 10" stroke cylinders**
- **Unique design makes it easy to roll debris into tight piles**
- **X-treme sizes: 63", 72", 81", 84", 96"**

X-treme Grapple Rake Specs

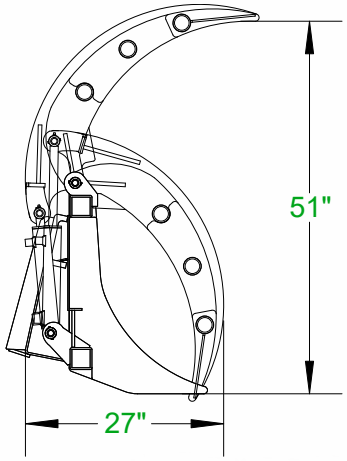

X-treme Grubbing Grapple

1 inch AR400 bottom tines that have minimal gussets allow for deep penetration into the soil. 5/8 inch AR400 grapple closes to 12” for tight clamping on logs and brush. Prying out stumps and having the versatility of a brush grapple are now found in one attachment.

- **1” AR400 bottom tines.**
- **2 x 10 cylinder.**
- **5/8” top tine.**
- **Cylinder cover.**

X-treme Grubbing Grapple Specs

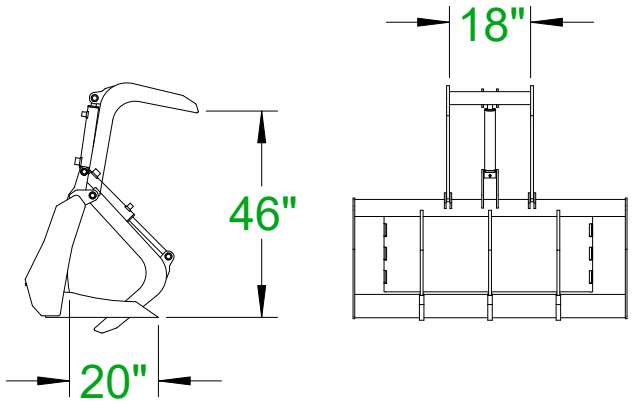

Monster Root Grapple
Monster Grapple Bucket

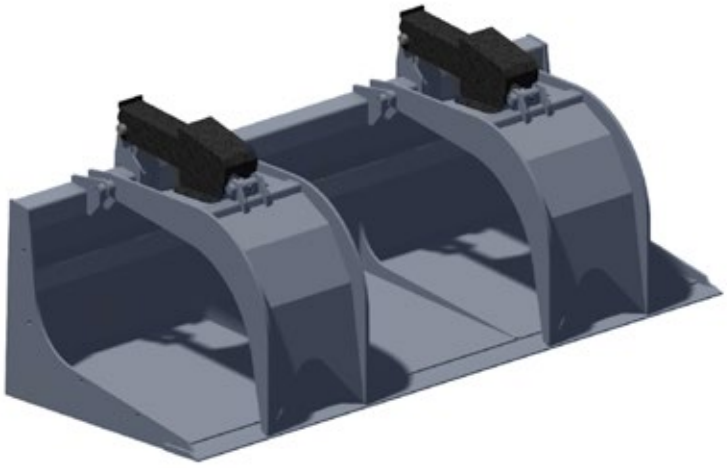

The monster root grapple is a perfect match for 100 horse power track loaders and telescoping loaders (telehandlers). Reinforced with extra tubing and pipe, enormous opening and depth and the largest capacity on the market.

- Cylinder and cylinder shaft protection
- 2 x 10 hydraulic cylinders

Monster Root Grapple Specs

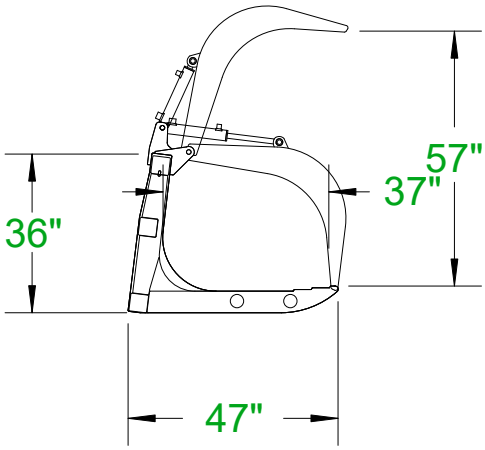

The monster grapple bucket is a perfect match for 100 horse power track loaders and telescoping loaders (telehandlers). Reinforced with extra tubing and ribs, enormous opening, deep floor and the largest capacity on the market.

- Optional bolt on cutting edge
- Cylinder and cylinder shaft protection
- 2 x 10 hydraulic cylinders

Monster Grapple Bucket Specs

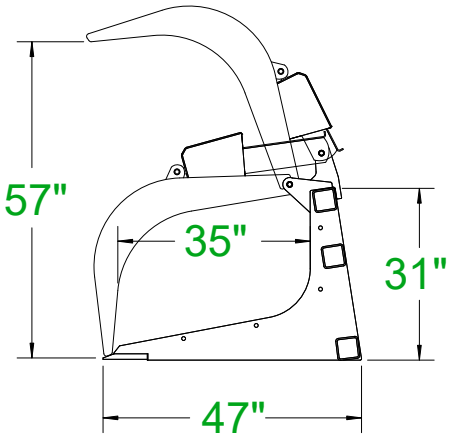

Grapple Buckets

Our Grapple Buckets are very versatile attachments. They're all great choices for anyone who owns a skid steer. Available in a wide range of sizes, they easily pick up logs, rocks, left over building supplies or any other type of debris.

Up to 35 HP on compact tractor.

Up to 45 HP on standard duty.

Up to 65 HP on heavy duty.

All of our grapple buckets have 2" bore by 10" stroke cylinders, with all hydraulic lines routed inside the tubing to prevent tears. They are also built with top quality steel, oversized points and bushings, with grease fittings at every pivot point. Every unit exceeds the lifting capacity of the skid steer machine it is attached to.

Compact Tractor Grapple Bucket Specs

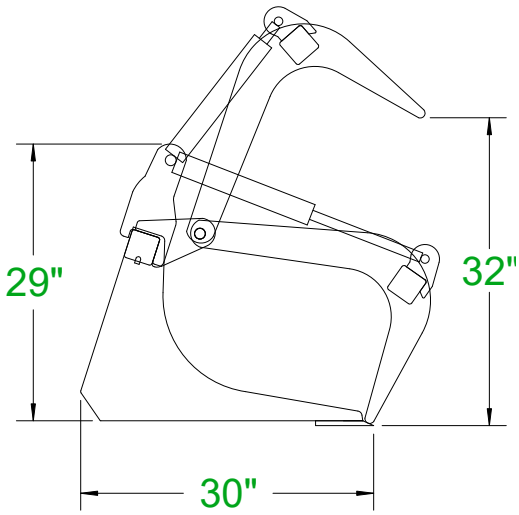

Standard / Heavy Duty Grapple Bucket Specs

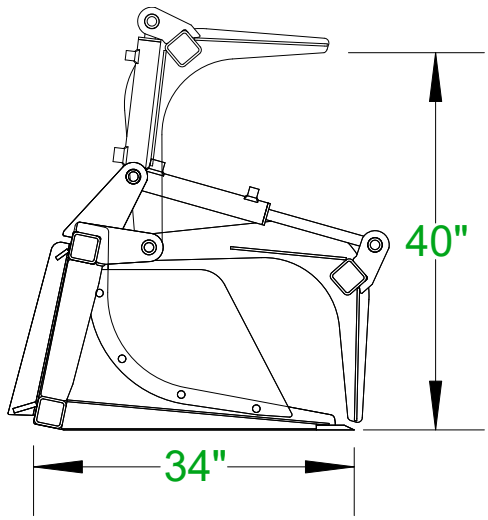

- 2" bore by 10" stroke cylinder, rated at 4,000 PSI
- Grease fittings at every pivot point
- Optional weld on teeth and bolt on cylinder rod cover kit
- Optional bolt on edge
- Bolt on sides included on HD
- Compact Tractor sizes: 60", 66", 72"
- Standard Duty sizes: 63", 72"
- Heavy Duty sizes: 63", 66", 72", 78", 81"

CID CONSTRUCTION IMPLEMENTS DEPOT INC.
X-treme Attachments

X-treme Grapple Bucket

- 2" bore by 10" stroke cylinders that operate independently, rated at 4,000 PSI
- 5/8" top tines
- Hydraulic lines on top & routed inside the tubing to prevent tears
- Grease fittings at every pivot point
- Bucket has a 1" x 8" cutting edge
- Optional weld on teeth
- Available sizes: 66", 72", 78", 81", 84", 96"
- Optional bolt on edge
- Bolt on sides included

The X-treme Grapple Bucket is ideal for picking up logs, rocks, left over building supplies or any other type of debris. It can handle more material and is intended for larger machines than our Heavy Duty Grapple Bucket.

One feature that separates our X-treme Grapple Bucket from our competitor's comparable attachment is the enclosed hydraulic cylinder shaft. Most grapple buckets only have the actual cylinder enclosed and not the shaft. We protect both! Anyone that has had debris fall on the cylinder shaft knows what damage this can cause.

It features 2" bore by 10" stroke cylinders that operate independently to adjust for uneven loads. The hydraulic lines are routed inside the tubing to prevent tears. It is also built with top quality steel, oversized points and bushings, with grease fittings at every pivot point. The X-treme Grapple Bucket has a 1" x 8" cutting edge. Every unit exceeds the lifting capacity of the skid steer machine it is attached to. 65 HP and up.
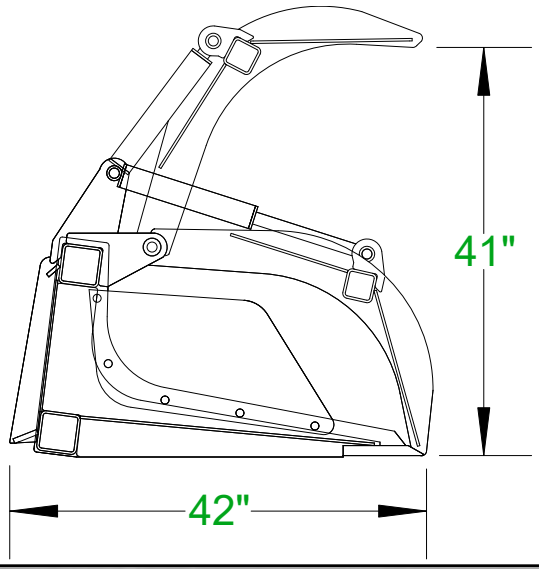
X-treme Grapple Bucket Specs